DOC. NO. : DS-02 PAGE NO. : 1 OF 1	GAS-SPRING DATA SHEET MODEL : 18.08 & 19.08 AUTO-LIFT	DATE : 13.04.2024 REV. NO. : 05

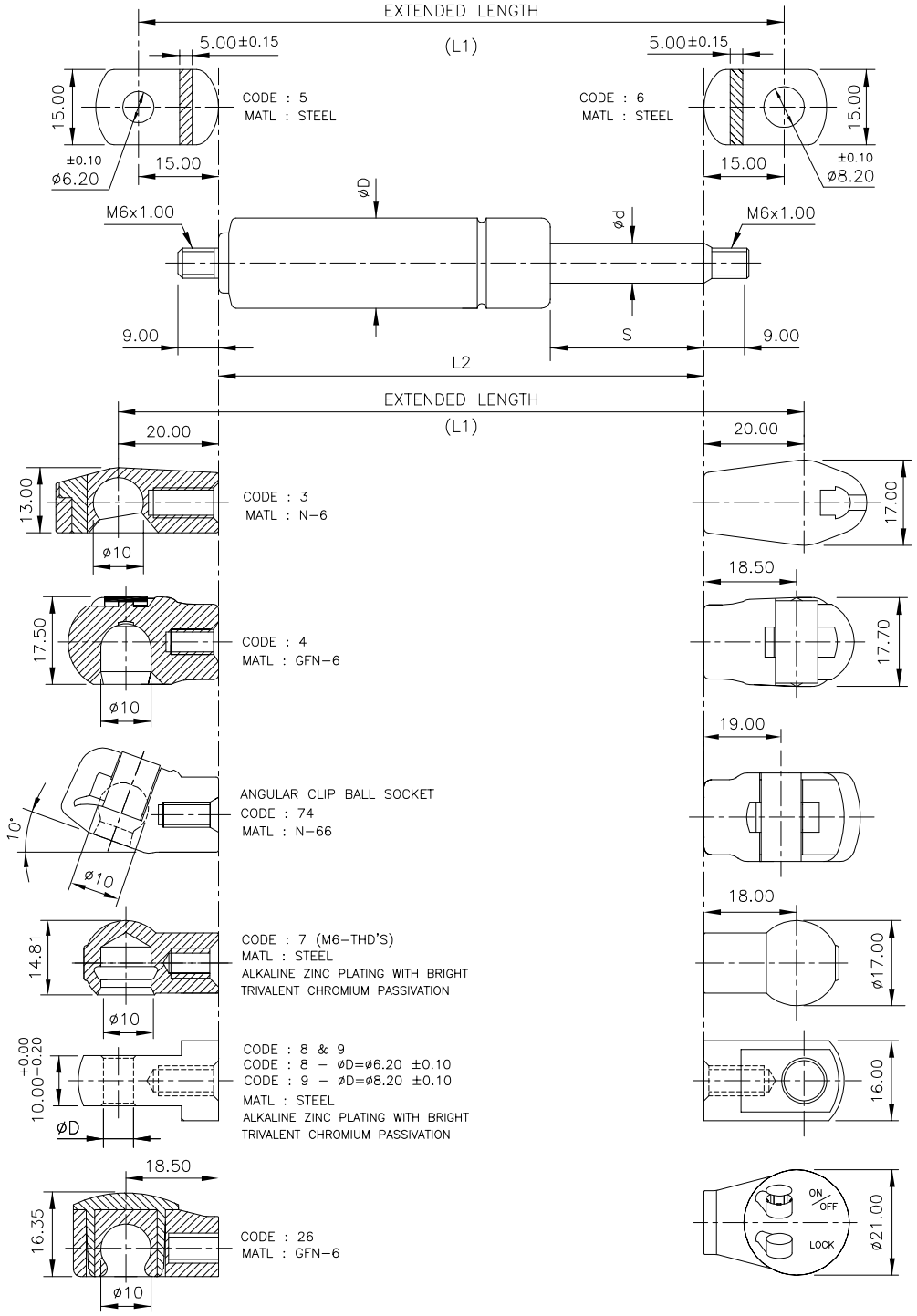

TUBE DIA. øD	ROD DIA. ød	FORCE (F1) N		STROKE (MM)		STD AVAILABLE STROKE (S) MM		
		MIN.	MAX.	MIN.	MAX.			
ø18.00	ø8.00	50	500	48.00	370.00	50.00 64.00	122.00 142.00	250.00 270.00
ø19.00	ø8.00	50	700	48.00	370.00	80.00 98.00	200.00 245.50	335.00 370.00

ORDER CODE

AL - Dd - XX - L1 - S - F1 - YY - BP

- AL: AUTO-LIFT
- Dd: MODEL : TUBE & ROD DIA.
- XX: CODE FOR TUBE SIDE END FITTING
- L1: EXTENDED LENGTH
- S: STROKE
- F1: FORCE IN NEWTON
- YY: CODE FOR ROD SIDE END FITTING
- BP: CODE FOR BALL PIN

ORDER EXAMPLE : AL - 1808 - 4 - 300 - 94 - 350N - 4 - 19

ASSUMPTION BP : BALL PIN CONSIDERED AT BOTH SIDES ALONG WITH NUT.

ORDER CODE

FOR GAS-SPRINGS WITH THREADED ENDS.

AL - Dd - TT - L2 - S - F1 - RT

- TT: TUBE END THD'S
- L2: EXTENDED LENGTH
- RT: ROD END THD'S

ORDER EXAMPLE : AL - 1808 - M6 - 300 - 94 - 350N - M6